HITACHI

YUTAMPO SERIES

Technical Catalogue

Indoor unit

YUTAMPO

TAW-(190/270)RHC

Outdoor unit

RAW-35RHC





HITACHI

Contents

General information 1
Features and benefits 2
General data 3
Capacity and selection data 4
Acoustic characteristic curves 5
Working range 6
General dimensions 7
Refrigerant cycle and hydraulic circuit 8
Refrigerant and water piping 9
Electrical and control settings 10
Optional functions 11

General Index

1. General information 1

1.1 General information 2

1.1.1 General notes 2

1.1.2 Introduction 2

1.2 Applied symbols 3

1.3 Norms and Regulations 3

1.4 Product guide 4

1.4.1 Classification of the units 4

1.4.1.1 Outdoor unit 4

1.4.1.2 Indoor unit 4

1.4.2 Product guide 5

1.4.2.1 Outdoor unit 5

1.4.2.2 Indoor unit 5

1.4.3 Accessory code list 6

2. Features and benefits 7

2.1 New features 8

2.1.1 New water tank 9

2.1.2 Wired LCD controller 9

2.1.3 Optional functions 10

2.1.4 New simplified electrical box 11

3. General data 13

3.1 Considerations 14

3.2 Tank unit (TAW-(190/270)RHC) 15

3.3 Outdoor unit (RAW-35RHC) 16

3.4 ERP data 17

3.5 Electrical data 18

4. Capacity and selection data 19

4.1 Hot Water Tank Selection procedure 20

4.2 Heating DHW Period 24

5. Acoustic characteristic curves 25

5.1 Considerations 26

5.2 Sound pressure level for outdoor unit 26

6. Working range 27

6.1 Power supply working range 28

6.2 Temperature working range 28

7. General dimensions 29

7.1 Tank unit (TAW-190RHC) 30

7.2 Tank unit (TAW-270RHC) 31

7.3 Outdoor unit (RAW-35RHC) 32

7.4 Service space 33

8. Refrigerant cycle and hydraulic circuit 35

8.1 Refrigerant cycle and hydraulic circuit 36

9. Refrigerant and water piping 37

9.1 General notes before performing piping work 38

9.1.1 Piping work 38
9.1.2 Suspension of refrigerant and water pipes 38

9.2 Refrigerant circuit 39

9.2.1 General notes R32 refrigerant 39
9.2.2 Refrigerant piping 39
9.2.3 Refrigerant charge 40

9.3 Domestic Hot Water Circuit 41

9.3.1 Additional hydraulic optional elements 41
9.3.2 Water piping 41
9.3.3 Water quality 42

10. Electrical and control settings 43

10.1 System wiring diagram 44

10.2 Electrical wiring diagram 45

10.2.1 TAW-(190/270)RHC 45
10.2.2 RAW-35RHC 46

11. Optional functions 47

11.1 Optional functions from unit controller 48

11.2 Optional external input/output signals 49

11.2.1 Available ports 49
11.2.2 Connections 50
11.2.3 Specification of the components for a correct installation 50
11.2.4 Input functions (To be configured from the unit controller) 51
11.2.5 Output functions (To be configured from the unit controller) 51

1. General information

Index

1.1 General information 2
1.1.1 General notes 2
1.1.2 Introduction 2
1.2 Applied symbols 3
1.3 Norms and Regulations 3
1.4 Product guide 4
1.4.1 Classification of the units 4
1.4.1.1 Outdoor unit 4
1.4.1.2 Indoor unit 4
1.4.2 Product guide 5
1.4.2.1 Outdoor unit 5
1.4.2.2 Indoor unit 5
1.4.3 Accessory code list 6

1.1 General information

1.1.1 General notes

© Copyright 2020 Johnson Controls-Hitachi Air Conditioning Spain, S.A.U. – All rights reserved.

No part of this publication may be reproduced, copied, filed or transmitted in any shape or form without the permission of Johnson Controls-Hitachi Air Conditioning Spain, S.A.U.

Within the policy of continuous improvement of its products, Johnson Controls-Hitachi Air Conditioning Spain, S.A.U. reserves the right to make changes at any time without prior notification and without being compelled to introducing them into previously sold products. This document may therefore have been subject to amendments during the life of the product.

Hitachi makes every effort to offer correct, up-to-date documentation. Despite this, printing errors cannot be controlled by Hitachi and are not its responsibility.

As a result, some of the images or data used to illustrate this document may not refer to specific models. No claims will be accepted based on the data, illustrations and descriptions included in this manual.

No type of modification must be made to the equipment without prior, written authorization from the manufacturer.

NOTE

This air to water heat pump water heater has been designed for standard water heating for human beings. For use in other applications, please contact your Hitachi dealer or service contractor.

1.1.2 Introduction

Hitachi proudly announces the newest R32 complete range of Heat Pump Water Heater in its award-winning YUTAMPO range.

The YUTAMPO units produce domestic hot water like any electrical heater, oil or gas boiler, but they do so by transforming renewable energy from the outside air and storing it into a heat energy tank. Heat pump water heaters extract the free energy present in the air, which is enough to heat a water tank up to a comfortable temperature, even on the coldest winter day. Every kW of electricity used to power the heat pump can yield up to more than 5 kW of energy for heating; this provides savings of up to 80% on heating expenses compared to a traditional fossil fuel boiler.

The system is simple to control; its new user controller (PC-ARFTE) improves the acclaimed and successful design used with the existing LCD controller, and provides a great number of new functions.

1.2 Applied symbols

During normal air conditioning system design work or unit installation, greater attention must be paid in certain situations requiring particular care in order to avoid damage to the unit, the installation or the building or property.

Situations that pose a risk to the safety of those in the surrounding area or to the unit itself are clearly indicated in this manual.

A series of special symbols are used to clearly identify these situations.

Pay close attention to these symbols and to the messages following them, as your safety and that of others depends on it.

DANGER

- ***The text following this symbol contains information and instructions relating directly to your safety.***
- ***Not taking these instructions into account could lead to serious, very serious or even fatal injuries to you and others.***

In the texts following the danger symbol you can also find information on safety procedures during unit installation.

CAUTION

- *The text following this symbol contains information and instructions relating directly to your safety.*
- *Not taking these instructions into account could lead to minor injuries to you and others.*
- *Not taking these instructions into account could lead to unit damage.*

In the texts following the caution symbol you can also find information on safety procedures during unit installation.

NOTE

- *The text following this symbol contains information or instructions that may be of use or that require a more thorough explanation.*
- *Instructions regarding inspections to be made on unit parts or systems may also be included.*

1.3 Norms and Regulations

Following Regulation EU No. 517/2014 on Certain Fluorinated Greenhouse gases, it is mandatory to fill in the label attached to the unit with the total amount of refrigerant charged on the installation.

Do not vent R32 into the atmosphere: R32 is fluorinated greenhouse gas covered by the Kyoto protocol global warming potential (GWP) R32 = 675.

Tn of CO2 equivalent of fluorinated greenhouse gases contained is calculated by indicated GWP * Total Charge (in kg indicated in the product label and divided by 1000.

Appropriate refrigerant

The refrigerant used in each unit is identified on the specification label and manuals of the unit. Hitachi shall not be held liable for any failure, trouble, malfunction or accident caused by units illegally charged with refrigerants other than the specified one.

Consequences of charging non-specified refrigerant

It may cause mechanical failure, malfunction and other accidents. It may cause operational failure of protection and safety devices of air conditioners. It may also cause lubrication failure of the sliding part of the compressor due to deterioration of refrigerant oil.

In particular, hydrocarbon refrigerants (such as propane, R441A, R443A, GF-08, etc.) are not allowed, since these are combustible and may cause major accidents such as fire and explosion in case of improper handling.

Once a non-specified refrigerant has been charged, no further servicing (including draining of refrigerant) shall be performed, even in case of malfunction. Improper handling of refrigerant may be a cause of fire and explosion, and servicing in such cases may be considered an illegal act.

End clients and costumers shall be informed that servicing is not approved, and the installer who charged the nonspecified refrigerant shall be asked to fix the unit.

Hitachi will accept no responsibility for units that have been charged with non-specified refrigerant once

1.4 Product guide

1.4.1 Classification of the units

1.4.1.1 Outdoor unit

Unit type: Outdoor unit (Split air system)	Position-separating hyphen (fixed)	Compressor power	R32 refrigerant	Heat pump	Series
RAW	-	35	R	H	C

1.4.1.2 Indoor unit

Unit type: YUTAMPO	Position-separating hyphen (fixed)	Tank capacity: 190 / 270 L	R32 refrigerant	Heat pump	Series
TAW	-	(x)	R	H	C

1.4.2 Product guide

1.4.2.1 Outdoor unit

1~ 230V 50Hz	
Unit	Code
RAW-35RHC	60374825



1.4.2.2 Indoor unit

1~ 230V 50Hz	
Unit	Code
TAW-190RHC	70491001
TAW-270RHC	70491014



1.4.3 Accessory code list

◆ Control accessories

Accessory	Name	Code	Figure
ATW-HCD-01	H-LINK Adapter for Central Devices application (to work with ATW-(MBS/KNX/TAG)-02)	7E549943	
ATW-MBS-02	MODBUS gateway for YUTAKI / YUTAMPO units	7E549924	
ATW-KNX-02	KNX interface for YUTAKI / YUTAMPO units	7E549925	
ATW-TAG-02	Home automation gateway	70549926	
AHP-SMB-01	SmartBox (Hi-Box)	70549919	
NEW ATW-OFC-02	Optional Function Connector (Inputs and Outputs optional signals)	7E549956	
NEW ATW-CP-05	Active Anode (Cathodic Protection)	7E549954	

2. Features and benefits

Index

2.1 New features 8
2.1.1 New water tank 9
2.1.2 Wired LCD controller 9
2.1.3 Optional functions 10
2.1.4 New simplified electrical box 11

2.1 New features

YUTAMPO is a split heat pump water heater for the production of domestic hot water (DHW). The system absorbs the heat of air and heats up water up to 55 ºC. The hot water is stored into the tank. There are two different tank capacities: 190 L and 270 L. The same outdoor unit is used for both tanks.

The YUTAMPO system heats up water with a higher efficiency and lower energy consumption in comparison with conventional combustion-type water heaters or electrical water heaters.

The YUTAMPO system achieves this by absorbing the heat energy in the air by means of the air heat exchanger, then heating up the water in the tank using this energy at the hot water heat exchanger.

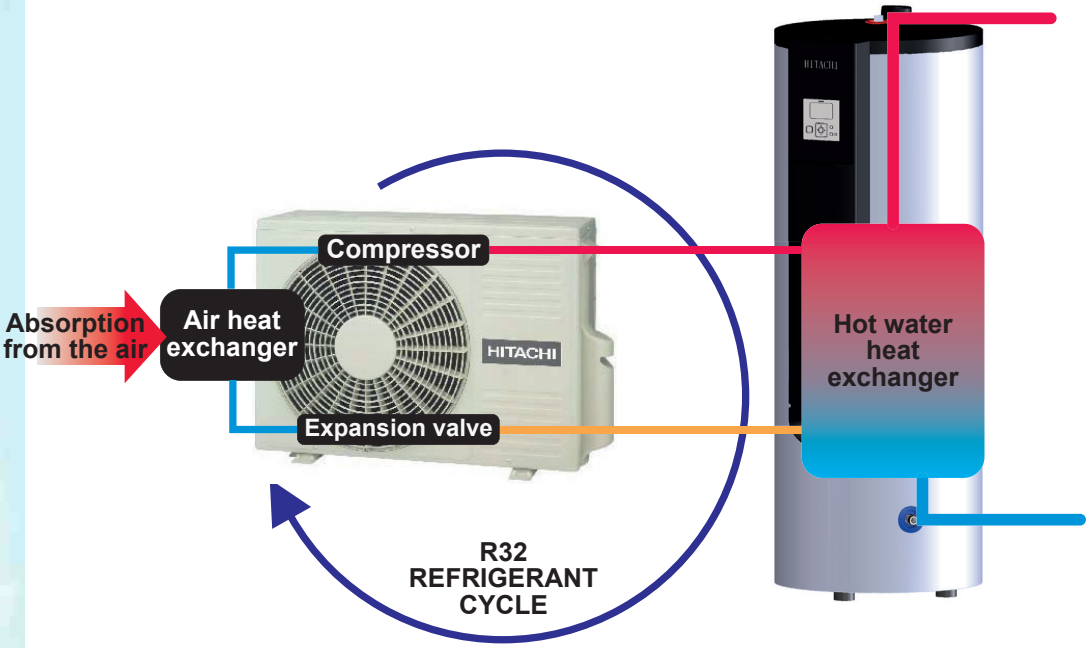

In other words, it is a heat pump system whose refrigerant cycle absorbs the heat from the air and transfers it to the water in the tank.

Additionally, the built-in heater of the tank allows to heat up the water up to 75 ºC, providing an anti-legionella function. The tank has additional corrosion protection by means of an optional anode, which further guarantees a long service life.

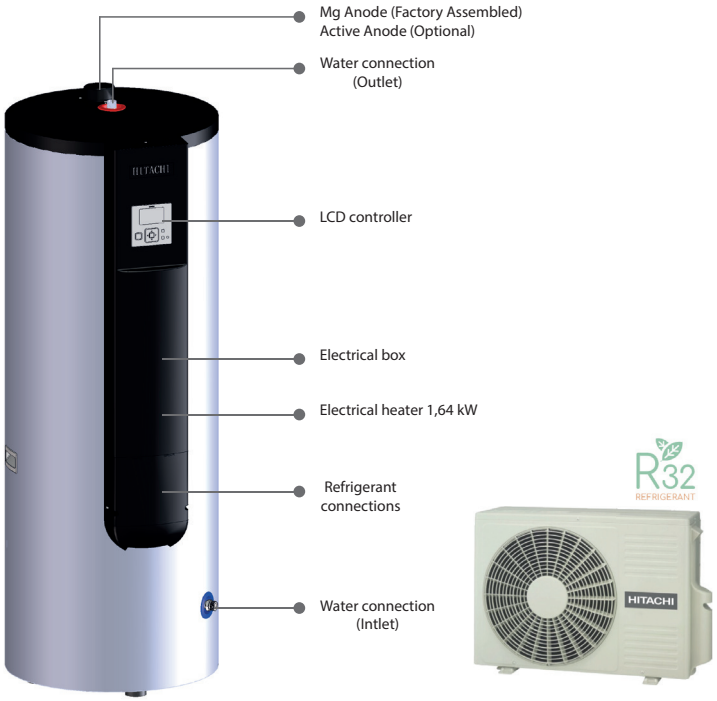

2.1.1 New water tank

Two new models of tank, with available capacities of 190 or 270 litres.

YUTAMPO TAW-190RHC

- Truly compact
  - Width: 520 mm
  - Depth: 597 mm
  - Height: 1.714 mm

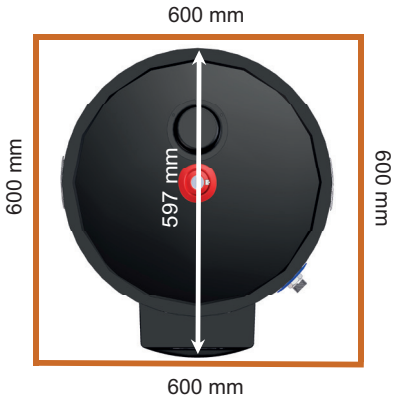

FITS PERFECTLY IN A STANDARD FURNITURE!

YUTAMPO TAW-270RHC

- Width: 600 mm
- Depth: 681 mm
- Height: 1.714 mm

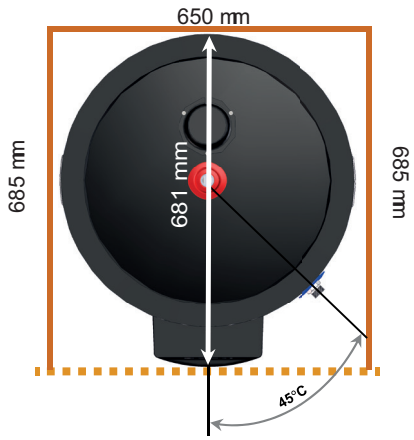

2.1.2 Wired LCD controller



The PC-ARFTE wired unit controller is the control device of the YUTAMPO series. PC-ARFTE is based on the PC-ARFHE controller for YUTAKI; it keeps the same operation logic of the YUTAKI products, with a redesigned user interface which focuses on user-friendliness.

Some of the special functions available through the LCD controller of the new YUTAMPO series from Hitachi are:

- Unit status view with the indication of instantaneous operation data (Temperature, compressor frequency and other operation parameters)
- Display of current alarms as well as alarm history
- Settings for simple timer and scheduled operation: Improved interface for an easier creation of simple timer set-up
- Quick actions menu for more comprehensive view: Timer (simple/schedule), Status...
- Boost operation: It allows an immediate heating of the domestic hot water
- Emergency operation of the heater, in case of outdoor unit malfunction
- Overall improvements in energy consumption, night shift function and other features and operation modes

◆ Software improvements

1. Out of working range indication

   As a protective measure for the system, the YUTAMPO unit will force OFF state in case the outdoor ambient temperature is out of its operating range (between -15°C and 37°C) and it required compressor to start.

   As a novelty, the outdoor ambient temperature -**1**- indicated on the LCD controller will blink, indicating this situation.

2. Timer Light signal

   A new yellow light indication has been created on the power button -**2**-, of the PC-ARFTE, in case the YUTAMPO is in OFF state due to the timer. That helps to differenciate if the YUTAMPO is in OFF state due to the timer or manual stop (due to the power button) avoiding any confusion about the reason for the stop.

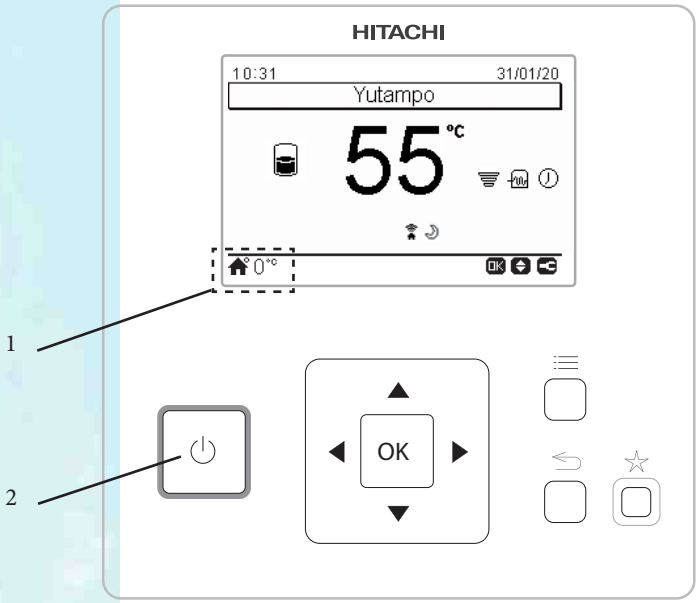

1	Outdoor ambient temperature: Blinking if out of operating range
2	Light power button indicator: • NO LIGHT: Manual OFF state • RED: OFF state due to an alarm • GREEN: ON state • YELLOW: OFF state due to the timer

2.1.3 Optional functions

Name of the function	Description
Operation mode status	Indication of the ratio between the actual temperature against the setting temperature, by means of a % icon
DHW operation modes	2 modes: Standard & High demand
Setting temperature	Indication of setting temperature on the LCD screen at all times
Standard / Boost	Easy access to the switching of "Standard / Boost" performance modes
Timer function	Up to 5 timer settings per day
Anti-legionella protection	Weekly or daily. Operation day, starting time, setting temperature and duration can be adjusted.
Check data menu	Indication of indoor unit and outdoor unit operation parameters (such as frequency, Td, etc.)
Alarm history	Indication of alarm codes of both the indoor unit and outdoor unit
Ambient temperature	Indication of the outdoor air temperature measured by the outdoor unit
Power consumption	Indication of available data on power consumption
Electric heater operation (activated by LCD Menu)	Backup of the heat pump Heating in high temperature settings Emergency operation in case of outdoor unit malfunction

2.1.4 New simplified electrical box

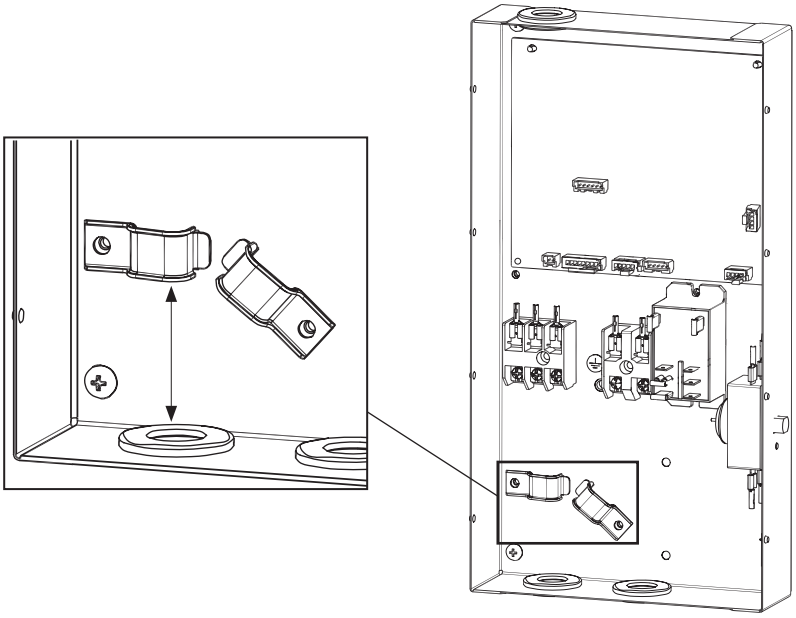

The new electrical box is more practical and safety than those of previous models. The location of wiring harness clamps has been modified, being closer to the wiring entrance. Thus subjection of wires is improved and the installation and maintenance is simplified.

3. General data

Index

3.1 Considerations 14
3.2 Tank unit (TAW-(190/270)RHC) 15
3.3 Outdoor unit (RAW-35RHC) 16
3.4 ERP data 17
3.5 Electrical data 18

3.1 Considerations

- The domestic hot water heating capacities are based on the EN 16147:2017 standard.
- The sound data is based on the following conditions:
  - Distance of the measuring point: at 1 meter from the unit's front surface; 1 meter from floor level.
  - The sound pressure data was measured in an anechoic chamber. The reflected sound of the specific installation site shall be therefore taken into account.
- For specific details about data corresponding to the working range, please refer to the *"6. Working range"* chapter.

Keywords:

- DB: Dry bulb
- WB: Wet bulb

Operation conditions		Heating
Water temperature	**ºC**	Capacities: From 10 ºC to 53 ºC Sound data: From 10 ºC to 55 ºC
Indoor ambient air temperature	**DB**	20 °C
	WB	12 °C
Outdoor air inlet temperature	**DB**	7 °C
	WB	6 °C
Piping Length: 5 metres		

3.2 Tank unit (TAW-(190/270)RHC)

Model		Units	TAW-190RHC	TAW-270RHC
General data				
Power supply			1~ 230V 50Hz	
Nominal volume of the tank		L	190	270
Declared load profile			L	XL
Setting temperature for the performance measurements below *1	Tset	°C	53	53
Reference hot water temperature *1	Θwh	ºC	52.6	52.8
COPt (Based on EN-16147, Setting 53 ºC, Outdoor temperature: 7 ºC) *1	COPdhwt	-	3.1	3.2
Maximal volume of usable hot water *1	Vmax	L	256	360
Standby power input *1 *2	Pes	W	20	23
Heat-up time *1	Time	h:min	3:00	3:30
	Energy input (Weh)	kWh	3.31	4.44
Thermal charge of the electrical heater		(W/cm²)	7.37	7.37
Outdoor unit Rated heat output	Prated	kW	2.98	3.59
Temperature setting range		°C	30~75 *4	30~75 *4
Maximum water temperature (with electric heater)		°C	75	75
Power standby unit		W	2.5	2.5
Indoor sound power level (Lwa) *3		dB(A)	-	-
Outdoor sound power level (Lwa) *3		dB(A)	63	63
Rated pressure of the water tank		MPa	0.7	0.7
Electrical data				
Power cable of the electrical heater		Quantity	2 + Earth	
Section of the power cable of the electrical heater (*)		mm²	1.5	
Electrical heater capacity		kW	1.64	
Recommended fuse (or CB) size for Electrical Heater		A	10	10
Communication wires between the tank and the outdoor unit		Quantity	3	
Section of communication wires between tank and outdoor unit		mm²	0.75	
Dimensions				
Width unit / packing		mm	520 / 590	600 / 680
Height unit / packing		mm	1714 / 1805	1714 / 1805
Depth unit / packing		mm	597 / 660	681 / 730
Weight Net / Gross		kg	53 / 63	62 / 74
Refrigerant data				
Flare nut size (Liquid / Gas)		mm	Ø 6.35 / Ø 9.52	Ø 6.35 / Ø 9.52
Minimum piping length / Maximum piping length		m	5 / 20	
Height difference		m	10	
Other information				
Colour tone of the front frame		-	Black	Black
Colour tone of the external plate		-	White	White
Tank material		-	DUPLEX Stainless Steel	
IP protection		IP	X1B	X1B
Tank Corrossion Protection		-	Magnesium Anode / Active Anode as accessory	
Heater Material		-	Alloy 840 + SS304	

Considerations:

- **1: Value obtained with an air temperature of 7ºC and a cold water temperature of 10ºC, according to the EN 16147:2017 standard, with a length of 5 m of refrigerant piping connection and no height difference.*
- **2: Electricity consumption without hot water tapping.*
- **3: Value measured when heating up water from 10ºC to 55ºC, with an average outdoor air temperature of 20ºC.*
- **4: 55ºC in case that the electrical heater is disabled.*
- *(*) Cable size depends on length and wiring system connections between tank and outdoor unit (refer to chapter "10.1 System wiring diagram" for more details).*
- *Data on brackets are preliminary.*

3.3 Outdoor unit (RAW-35RHC)

		Units	RAW-35RHC
General data			
Power supply			1~ 230V 50Hz
Noise level (sound power) *1		dB(A)	-
IP protection		IP	24
Air flow (Heating)		m^3/h	1620
Colour			Beige
Outdoor temperature limit (Heating)		°C	-15 ~ 37
Electrical data			
Cable section (Power) (*)		mm^2	1.50 x 2 + Earth
Cable section (Interconnection)		mm^2	0.75 x 3 + Earth
Recommended fuse (or CB) size		A	15
Dimensions and weight data			
Width unit / packing		mm	841 / 875
Height unit / packing		mm	548 / 591
Depth unit / packing		mm	335 / 377
Weight Net / Gross		kg	32.5 / 35
Refrigerant data			
Refrigerant			R32
Amount of refrigerant		kg	1
Flare nut size (Liquid / Gas)		“	1/4” / 3/8”
Minimum piping length		m	5
Maximum piping length / Height difference		m	20/10
Other information data			
Condenser fan			Propeller fan
Compressor	Type		Rotary
	Oil charge	ml	320 ±20
	Oil type		ACS-68R or equivalent
	Coil resistance	Ω	2.167 at 20 °C
	Quantity		1

Considerations:

- **1: Value measured when heating up water from 10°C to 55°C, with an average outdoor air temperature of 20°C.*
- *(*) Cable size depends on length and wiring system connections between tank and Outdoor Units (refer to chapter “10.1 System wiring diagram” for more details).*

3.4 ERP data

Model		Unit	TAW-190RHC	TAW-270RHC
Declared load profile			L	XL
AVERAGE CONDITION				
Energy efficiency of water heating *2	η wh	%	125	129
Energy efficiency class of water heating	-	-	A+	A+
Annual electricity consumption	AEC	kWh	816	1298
COLDER CONDITION				
Energy efficiency of water heating *2	η wh	%	110	113
Annual electricity consumption	AEC	kWh	928	1476
WARMER CONDITION				
Energy efficiency of water heating *2	η wh	%	142	140
Annual electricity consumption	AEC	kWh	720	1199
Setting Temperature	Tset	°C	53	53
Indoor sound power level (Lwa)		dB(A)	-	-
Outdoor sound power level (Lwa) *1		dB(A)	63	63

Considerations

- *According to Annex III of COMMISSION REGULATION (EU) No.814/2013 of 2 August 2013 implementing Directive 2009/125/EC of the European Parliament and of the Council with regard to ecodesign requirements for water heaters and hot water storage tanks .*
- *According to Annex IV of COMMISSION DELEGATED REGULATION (EU) No 812/2013 of 18 February 2013 supplementary Directive 2010/30/EU of the European Parliament and of the Council with regard to the energy labelling of water heaters, hot water storage tanks and packages of water heater and solar device.*
- *Special precautions must be taken during assembly, installation and maintenance.*
- *This appliance must be installed, maintained and dismantled by professionals. Do not vent contained refrigerant into the atmosphere since this refrigerant fluid is a fluorinated greenhouse gas regulated under European Regulation (EU) No 517/2014.*
- **1: Sound power level is the A-weighted sound power level [dB(A)] measured at standard rated conditions for the "Domestic Hot Water" mode operation in accordance to EN12102-2:2017.*
- **2: Data calculated in accordance to EN16147:2017 and the Commission Communication 2014/C 207/03.*

3.5 Electrical data

Keywords:

- U: Power supply
- PH: Phase
- IPT: Total input power
- STC: Starting current: Less than maximum current
- RNC: Running current
- MC: Maximum current

NOTE

- *The "Maximum current" shown in the tables is the maximum total running current of the unit under the following conditions:*
  - *Power supply voltage: 90 % of the rated voltage.*
- *The power supply cables must be appropriately sized to provide this maximum current value.*
- *Specifications in these tables are subject to change without prior notice in order to let Hitachi offer the latest innovations to its customers.*

Independent supply to the indoor unit (Tank) model	Electrical heater power supply	Applicable voltage		RNC (A)	IPT (kW)	MC (A)	Max. IPT (kW)	CB (A)	ELB (n/A/mA)	Section of the power cable (L-N) (*)	Section of the connection wires between the tank and the outdoor unit (1-2-3)
		U min. (V)	U max. (V)								
TAW-190RHC	1~ 230V 50Hz	207	253	7.1	1.64	7.5	1.64	10	2/40/30	1.5 mm^2	0.75 mm^2
TAW-270RHC											

Independent supply to the outdoor unit model	Power supply	Applicable voltage		RNC (A)	IPT (kW)	MC (A)	Max. IPT (kW)	CB (A)	ELB (n/A/mA)	Section of the power cable (L-N) (*)	Section of the connection wires between the tank and the outdoor unit (1-2-3)
		U min. (V)	U max. (V)								
RAW-35RHC	1~ 230V 50Hz	207	253	4.9	1.00	7.9	1.82	10	2/40/30	1.5 mm^2	0.75 mm^2

Common tank and outdoor unit models	Power supply	Applicable voltage		RNC (A)	IPT (kW)	MC (A)	Max. IPT (kW)	CB (A)	ELB (n/A/mA)	Section of the power cable (L-N) (*)	Section of the connection wires between the tank and the outdoor unit (1-2-3)
		U min. (V)	U max. (V)								
RAW-35RHC + TAW-(190/270) RHC	1~ 230V 50Hz	207	253	11.7	2.68	15.4	3.46	20	2/40/30	4.0 mm^2	0.75 mm^2

NOTE

- *Electric fuses can be used instead of magnetic circuit breakers (CB). In that case, select fuses with rated values similar to those of the CB.*
- *The earth leakage breaker (ELB) mentioned in this manual is also commonly known as residual current device (RCD) or residual current circuit breaker (RCCB).*
- *The circuit breakers (CB) are also known as thermal-magnetic circuit breakers or just magnetic circuit breakers (MCB).*
- *(*) Cable size depends on length and wiring system connections between tank and outdoor unit (refer to chapter "10.1 System wiring diagram" for more details).*

CAUTION

Ensure specifically that there is an earth leakage breaker (ELB) installed for the units (outdoor and indoor unit).

4. Capacity and selection data

Index

4.1 Hot Water Tank Selection procedure 20

4.2 Heating DHW Period 24

4.1 Hot Water Tank Selection procedure

The domestic hot water tank to be selected depends on the daily usage water demand.

The daily water demand is estimated by following pattern usages table based on EN-16147:

Type of usage	Energy Pattern (kWh)	Water temp. Pattern (ºC)
Small (Hands Cleaning)	0.105	40
Floor Cleaning	0.105	40
Household cleaning	0.105	55
Small dish wash	0.315	55
Medium dish wash	0.420	55
Larger dish wash	0.735	55
Large	0.525	40
Shower	1.400	40
Big Shower	1.820	40
Bath	3.605	40
Big Bath	4.420	40

Before calculation of total volume tank necessities, next consideration must be selected:

- Setting Temperature of the domestic hot water tank. (In next example 53 ºC, Range from 40~75 ºC) (Wset)
- Cold water inlet temperature (In next example 10 ºC) (Win)

After that, a complete calculation of tank necessities can be done.

Following example is considering a tapping usage for the equivalent of family house (L: 3 persons):

Example for Family usage (L) by EN16147

Type of usage	Energy Pattern	Water temp. Pattern	Volume Pattern	Volume at set 53 ºC	Occurrence day pattern	Total Energy per day	Total volume at set 53 ºC
Small (Hands Cleaning)	0.105	40	3.01	2.10	16	1.680	33.6
Floor Cleaning	0.105	40	3.01	2.10	1	0.105	2.1
Household cleaning	0.105	55	2.01	2.10	2	0.210	4.2
Small dish wash	0.315	55	6.03	6.31	1	0.315	6.3
Medium dish wash	0.420	55	8.04	8.41	0	0.000	0.0
Larger dish wash	0.735	55	14.07	14.72	1	0.735	14.7
Large	0.525	40	15.07	10.52	0	0.000	0.0
Shower	1.400	40	40.19	28.04	1	1.400	28.0
Big Shower	1.820	40	52.25	36.45	0	0.000	0.0
Bath	3.605	40	103.49	72.20	2	7.210	144.4
Big Bath	4.420	40	126.89	88.53	0	0.000	0.0
Total						11.66	233.4

Where (Example of Small Usage):

- Energy Pattern (Ep)(kWh)
  - “Basin” type tappings (bath, dish wash, floor cleaning): The aim is to achieve an estimated energy of every pattern.
  - Example: Small (Hand cleaning) use approximately 0,105 kWh of tank energy.
- Water temperature pattern (Wtp)(ºC)
  - Temperature needed for each usage type.
  - Example: Small (Hand cleaning) use water at approximately at 40ºC.

- Volume Pattern (Vp)(ℓ)
  - Equivalent water volume that it is using at every pattern considering at which temperature is needed and at which temperate in entering:
  - Example: Small (Hand cleaning)

$$Vp\ (l) = \frac{Ep * 3600}{(AT * Cp)} = \frac{0.105 * 3600}{(40 - 10) * 4.18} = 3.01\ \ell$$

    - AT= Water temperature necessary at pattern (Wtp) - Water tank inlet temperature (Win) (ºC) (at example= 10ºC)
    - Cp= Specific heat capacity of water (Kj/(kg*K) (4,18)

Small Hands cleaning use approximately 3,01 ℓ of water

- Real tank necessary water depending of tank setting (Example setting at 53ºC):
  - Example: Small (Hand cleaning)

$$Vs\ (L) = Vp * \frac{Wtp\ (ºC) - Win\ (ºC)}{Wset\ (ºC) - Win\ (ºC)} = 3.01 * \frac{(40 - 10)}{(53 - 10)} = 2.10\ \ell$$

    - Wtp (ºC) = Water temperature necessary at pattern (Example: 40ºC)
    - Win (ºC) = Cold Water temperature inlet (Example: 10ºC)
    - Wset (ºC) = Water tank setting temperature (Example: 53ºC)
- Occurrences per day of pattern
  - It is the number of usages of every tapping per day
  - Small (Hands Cleaning) pattern is doing 7 tappings per day.
- Total energy per day
  - Is the total of energy using per day of every usage type
- Total volume per day at water outlet of 53 ºC:
  - Is the total of water volume using per day of every usage tapping.
- Total example
  - Total energy per day: 11.65 Kwh
  - Tank volume per day: 233.4 ℓ

There are four tapping cycles (S/M/L/XL) for different energy contents:

1) Single person (S)

Type of usage	Energy pattern	Water temperature pattern	Volume pattern	Volume at set 53ºC	Occurrence day pattern	Total energy per day	Total volume at set 53ºC
Small (Hands Cleaning)	0.105	40	3.01	2.10	7	0.735	14.7
Floor Cleaning	0.105	40	3.01	2.10	0	0.000	0.0
Household cleaning	0.105	55	2.01	2.10	1	0.105	2.1
Small dish wash	0.315	55	6.03	6.31	1	0.315	6.3
Medium dish wash	0.420	55	8.04	8.41	1	0.420	8.4
Larger dish wash	0.735	55	14.07	14.72	0	0.000	0.0
Large	0.525	40	15.07	10.52	1	0.525	10.5
Shower	1.400	40	40.19	28.04	0	0.000	0.0
Bath	3.605	40	103.49	72.20	0	0.000	0.0
Total per day at 53 ºC setting temp						2.1	42.1

2) 2 persons (M)

Type of usage	Energy pattern	Water temperature pattern	Volume pattern	Volume at set 53ºC	Occurrence day pattern	Total energy per day	Total volume at set 53ºC
Small (Hands Cleaning)	0.105	40	3.01	2.10	16	1.680	33.6
Floor Cleaning	0.105	40	3.0	2.10	1	0.105	2.1
Household cleaning	0.105	55	2.0	2.10	2	0.210	4.2
Small dish wash	0.315	55	6.0	6.31	1	0.315	6.3
Medium dish wash	0.420	55	8.0	8.41	0	0.000	0.0
Larger dish wash	0.735	55	14.1	14.72	1	0.735	14.7
Large	0.525	40	15.1	10.52	0	0.000	0.0
Shower	1.400	40	40.2	28.04	2	2.800	56.1
Bath	3.605	40	103.5	72.20	0	0.000	0.0
Total per day at 53ºC setting temp						5.845	117.1

3) Family (L)

Type of usage	Energy pattern	Water temperature pattern	Volume pattern	Volume at set 53ºC	Occurrence day pattern	Total energy per day	Total volume at set 53ºC
Small (Hands Cleaning)	0.105	40	3.01	2.10	16	1.680	33.6
Floor Cleaning	0.105	40	3.0	2.10	1	0.105	2.1
Household cleaning	0.105	55	2.0	2.10	2	0.210	4.2
Small dish wash	0.315	55	6.0	6.31	1	0.315	6.3
Medium dish wash	0.420	55	8.0	8.41	0	0.000	0.0
Larger dish wash	0.735	55	14.1	14.72	1	0.735	14.7
Large	0.525	40	15.1	10.52	0	0.000	0.0
Shower	1.400	40	40.2	28.04	1	1.400	28.0
Bath	3.605	40	103.5	72.20	2	7.210	144.4
Total per day at 53 ºC setting temp						11.655	233.4

4) Big Family (XL)

Type of usage	Energy pattern	Water temperature pattern	Volume pattern	Volume at set 53ºC	Occurrence day pattern	Total energy per day	Total volume at set 53ºC
Small (Hands Cleaning)	0.105	40	3.01	2.10	21	2.205	44.2
Floor Cleaning	0.105	40	3.0	2.10	1	0.105	2.1
Household cleaning	0.105	55	2.0	2.10	2	0.210	4.2
Small dish wash	0.315	55	6.0	6.31	0	0.000	0.0
Medium dish wash	0.420	55	8.0	8.41	0	0.000	0.0
Larger dish wash	0.735	55	14.1	14.72	2	1.470	29.4
Large	0.525	40	15.1	10.52	0	0.000	0.0
Big Shower	1.820	40	52.2	36.45	1	1.820	36.5
Big Bath	4.420	40	126.9	88.53	3	13.260	265.6
Total per day at 53ºC setting temp						19.07	382.0

Hitachi Recommends to select tank size following next criteria:

- Lower than L Tapping: TAW-190NHB.
- Higher than L Tapping: TAW-270NHB.

Final selection will depend of domestic hot water tank setting.

4.2 Heating DHW Period

The following graph show the time required to heat up the water temperature in the tank unit to 55 ºC at different operation modes:

190 Liters

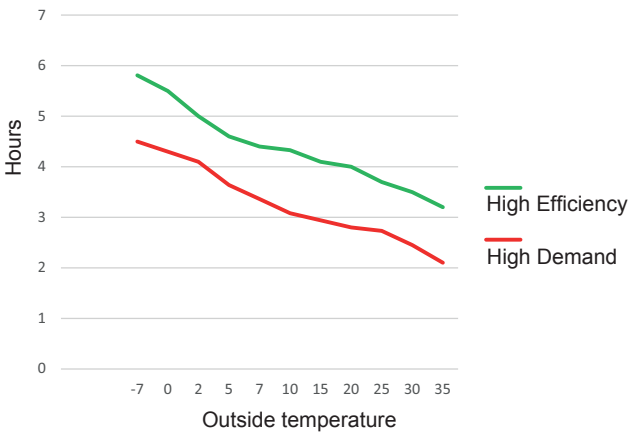

270 Liters

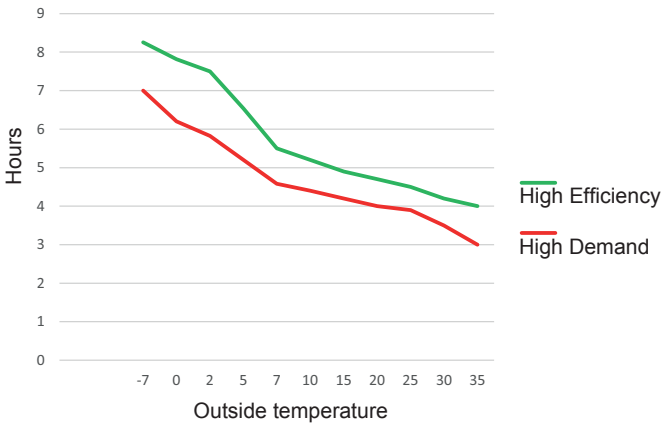

◆ Considerations:

- Heat up from 5 to 55ºC
- Tank ambient temperature at 20ºC
- Piping length: 7 m
- Without heater operation
- When the water temperature and outside temperature are low and heating the water take time, the electrical heater is automatically set to auxiliary operation to heat the water within eight hours
- Data above is an approximation of heating time period, real time can be change depending on:
  - Final Refrigerant piping length
  - Temperature conditions (Water and Ambient temperature)
  - Unit setting

NOTE

- *Hot water temperature can be set between 40ºC to 75ºC. Set the temperature depending on hot water volume that you require. The recommended temperature range is 40ºC to 55ºC (the factory default setting is 45ºC). A low water temperature setting will mean more efficient operation. A higher temperature setting will make more scale.*
- *The operation mode will automatically change depending on the hot water setting temperature.*

Hot water temperature	~ 55ºC	55ºC ~ 75ºC
Heat pump operation	ON (*1)	OFF
Electric heater operation	OFF/ON (*2)	ON

- *(*1): Heat pump may not operate depending on the condition of outdoor temperature and tank water temperature. Air temperature is below -15ºC or above 37ºC, the heat pump does not operate for the compressor protection.*
- *(*2): Electric heater will operate in case that heating capacity of heat pump operation is not enough to heat up the water to setting temperature.*

5. Acoustic characteristic curves

Index

5.1 Considerations 26

5.2 Sound pressure level for outdoor unit 26

5.1 Considerations

1 Distance of the unit from the measuring point: At 1 meter from the unit's front surface; 1 meter from floor level.

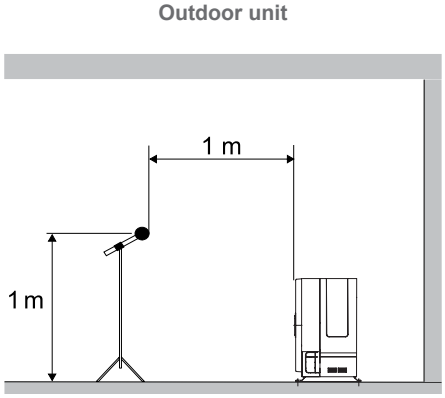

2 The data is measured in an anechoic chamber, so reflected sound should be taken into consideration when installing the unit.

5.2 Sound pressure level for outdoor unit

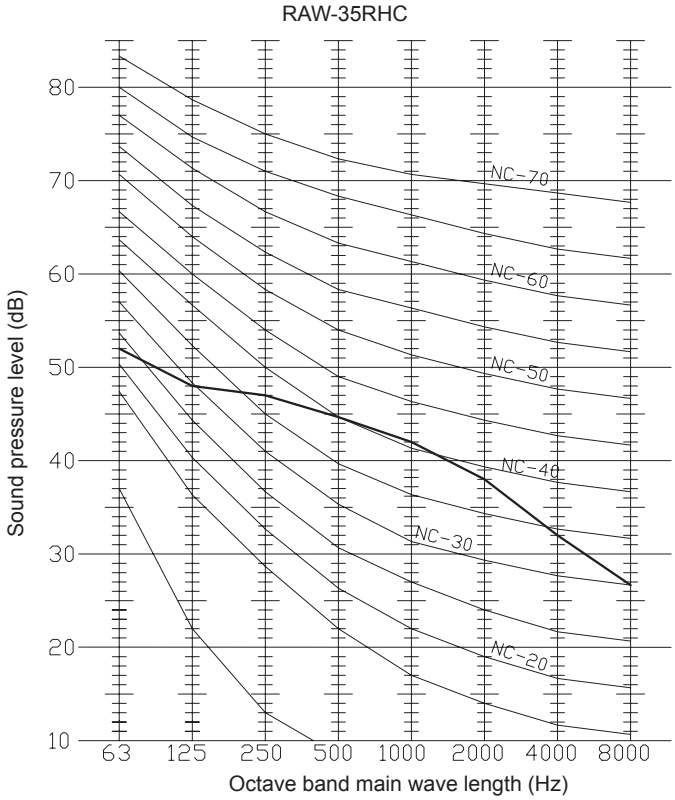

6. Working range

Index

6.1 Power supply working range 28

6.2 Temperature working range 28

6.1 Power supply working range

◆ Nominal power supply

- Single phase: 1~ 230V 50Hz

◆ Operating voltage

Between 90 and 110 % of the nominal voltage.

◆ Starting voltage

Always higher than 85 % of the nominal voltage.

6.2 Temperature working range

		Min	Max	Rated
Outdoor air temperature	ºC	-15	37	7
Water temperature (with E-heater)	ºC	5	55 (75)	53
Indoor tank	ºC	5	30	20

7. General dimensions

Index

7.1 Tank unit (TAW-190RHC) 30
7.2 Tank unit (TAW-270RHC) 31
7.3 Outdoor unit (RAW-35RHC) 32
7.4 Service space 33

7.1 Tank unit (TAW-190RHC)

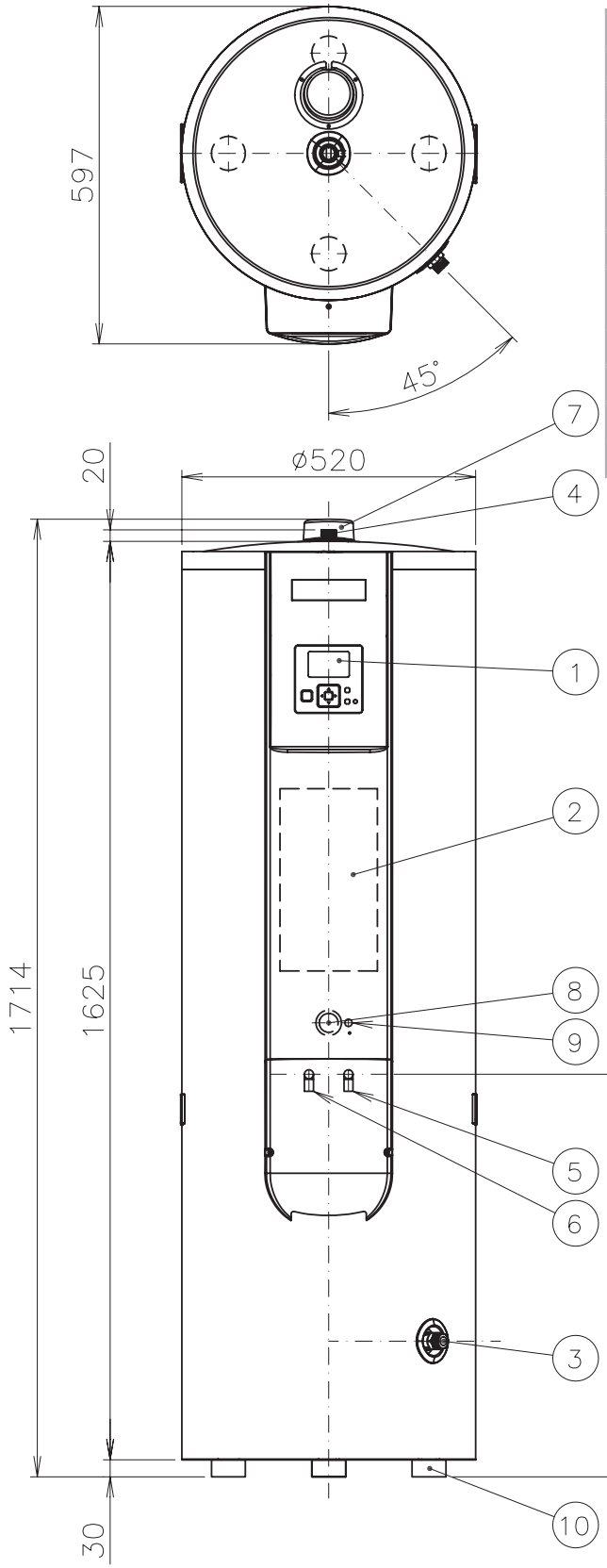

Nº	Name	Remarks
1	LCD controller	
2	Electrical box	
3	Cold water inlet	G 3/4" (blue)
4	Hot water outlet	G 3/4" (red)
5	Liquid refrigerant connection	1/4" Ø6.35 mm (black)
6	Gas refrigerant connection	3/8" Ø9.52 mm (black)
7	Anode	Mg Anode (Factory Assembled)
		Active Anode (Optional)
8	Heater	1.64 kW / 230 V
9	Thermistor	
10	Mounting foot	×4

Dimensions in mm

7.2 Tank unit (TAW-270RHC)

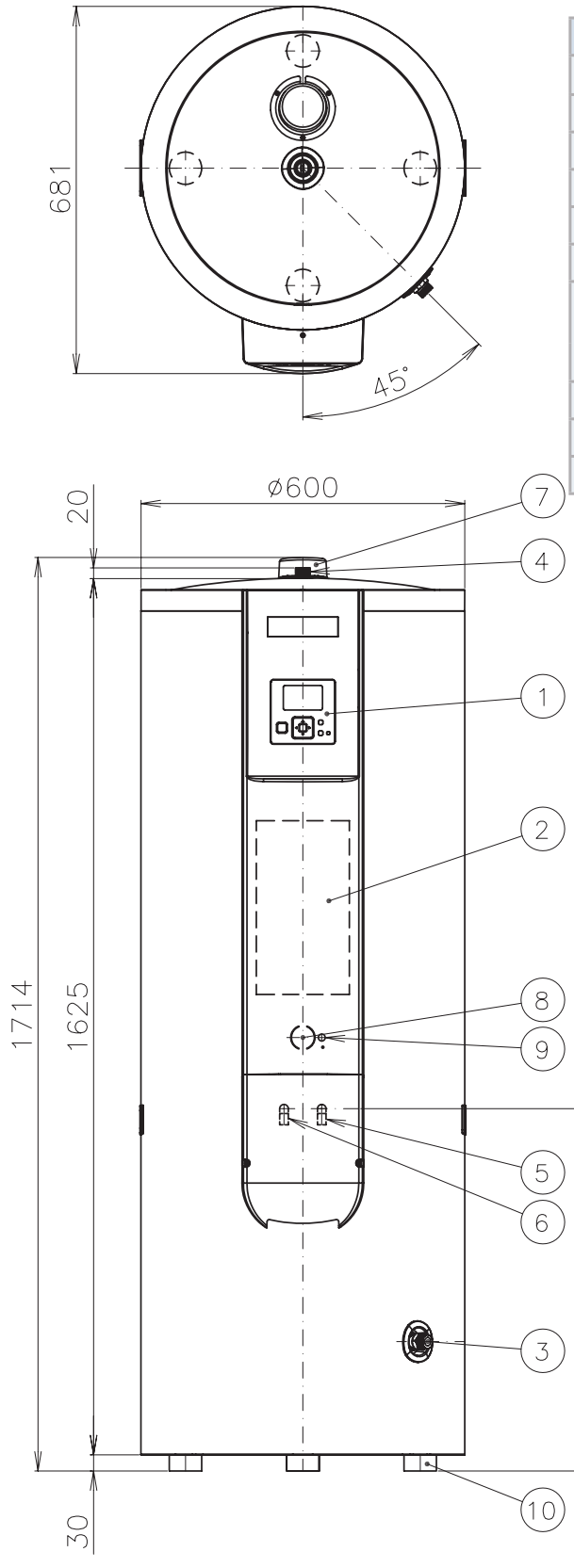

Nº	Name	Remarks
1	LCD controller	
2	Electrical box	
3	Cold water inlet	G 3/4" (blue)
4	Hot water outlet	G 3/4" (red)
5	Liquid refrigerant connection	1/4" Ø6.35mm (black)
6	Gas refrigerant connection	3/8" Ø9.52mm (black)
7	Anode	Mg Anode (Factory Assembled)
		Active Anode (Optional)
8	Heater	1.64 kW / 230 V
9	Thermistor	
10	Mounting foot	×4

Dimensions in mm

7.3 Outdoor unit (RAW-35RHC)

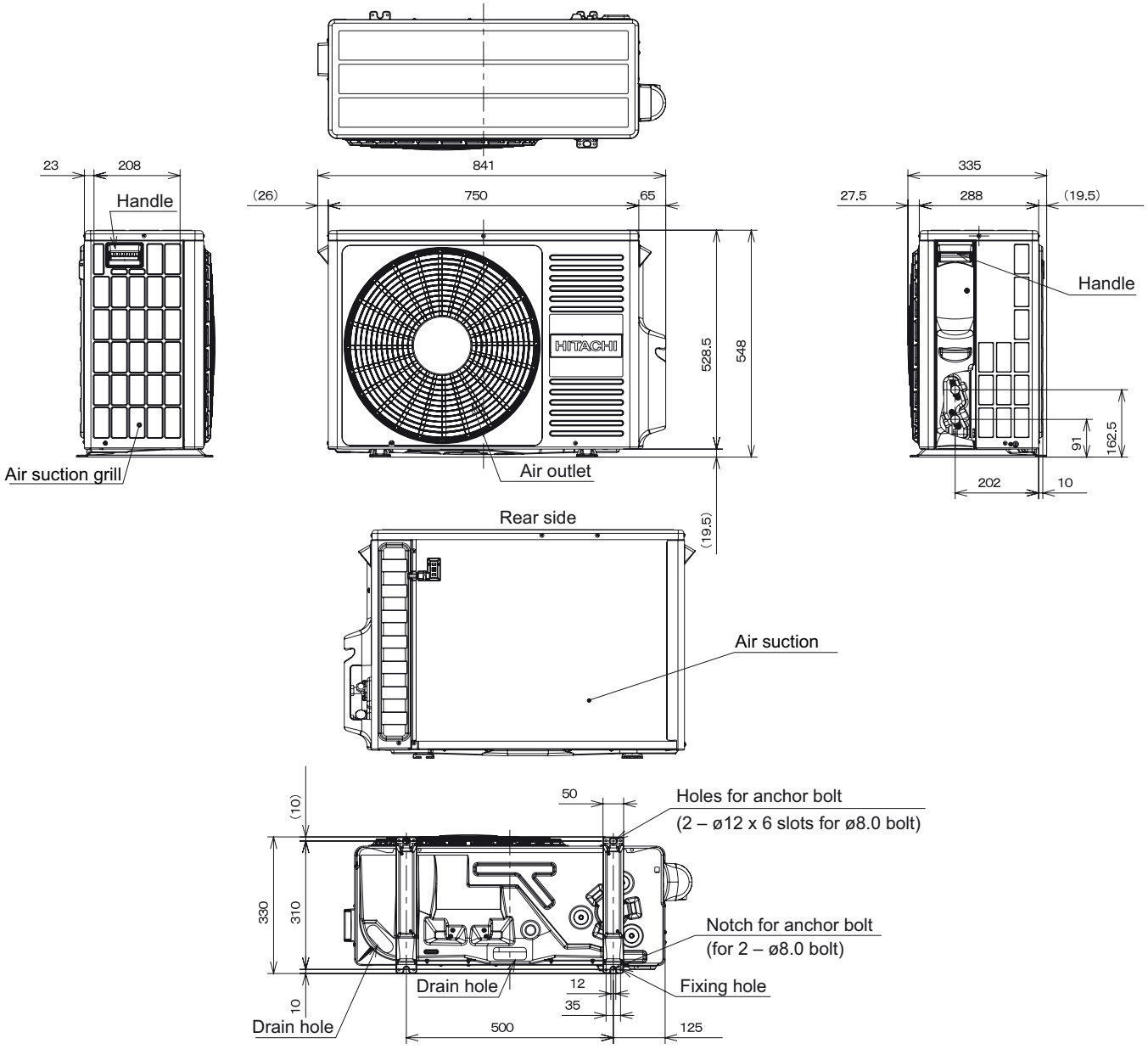

Dimensions in mm

7.4 Service space

Tank unit (TAW-190RHC)

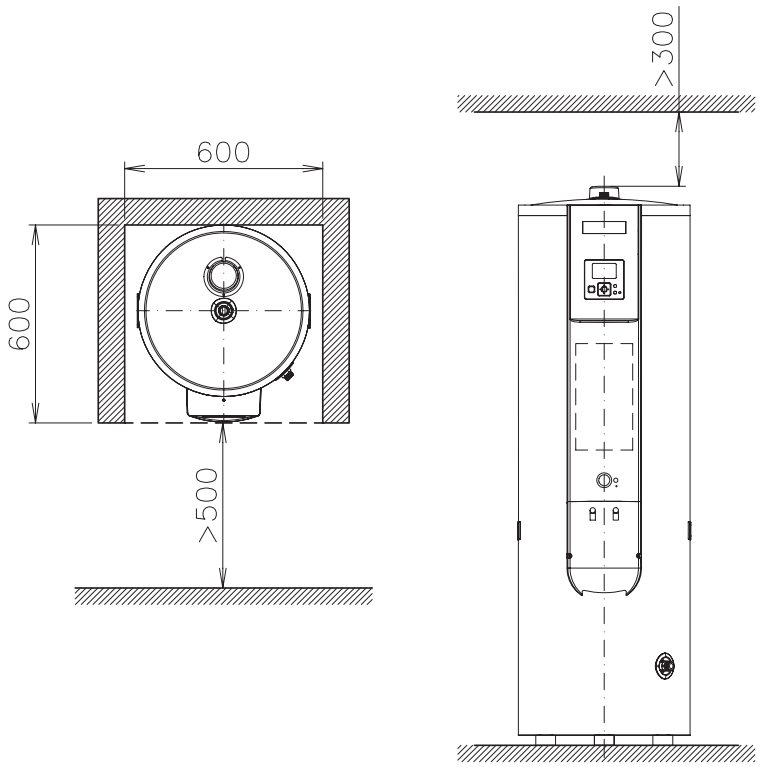

Dimensions in mm

Tank unit (TAW-270RHC)

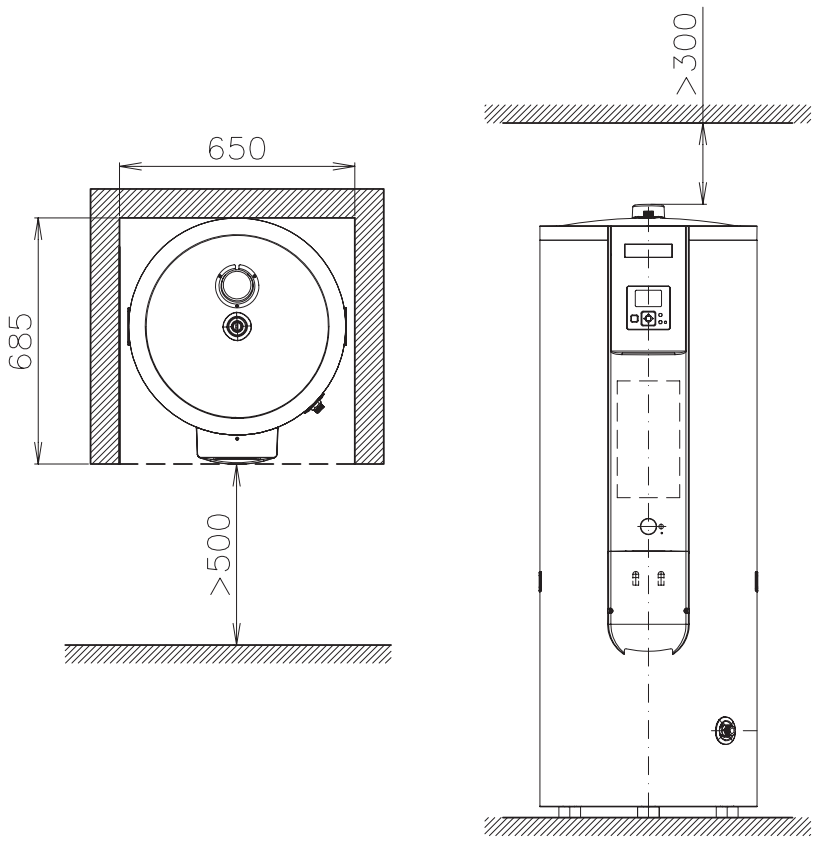

Dimensions in mm

8. Refrigerant cycle and hydraulic circuit

Index

8.1 Refrigerant cycle and hydraulic circuit..... 36

8.1 Refrigerant cycle and hydraulic circuit

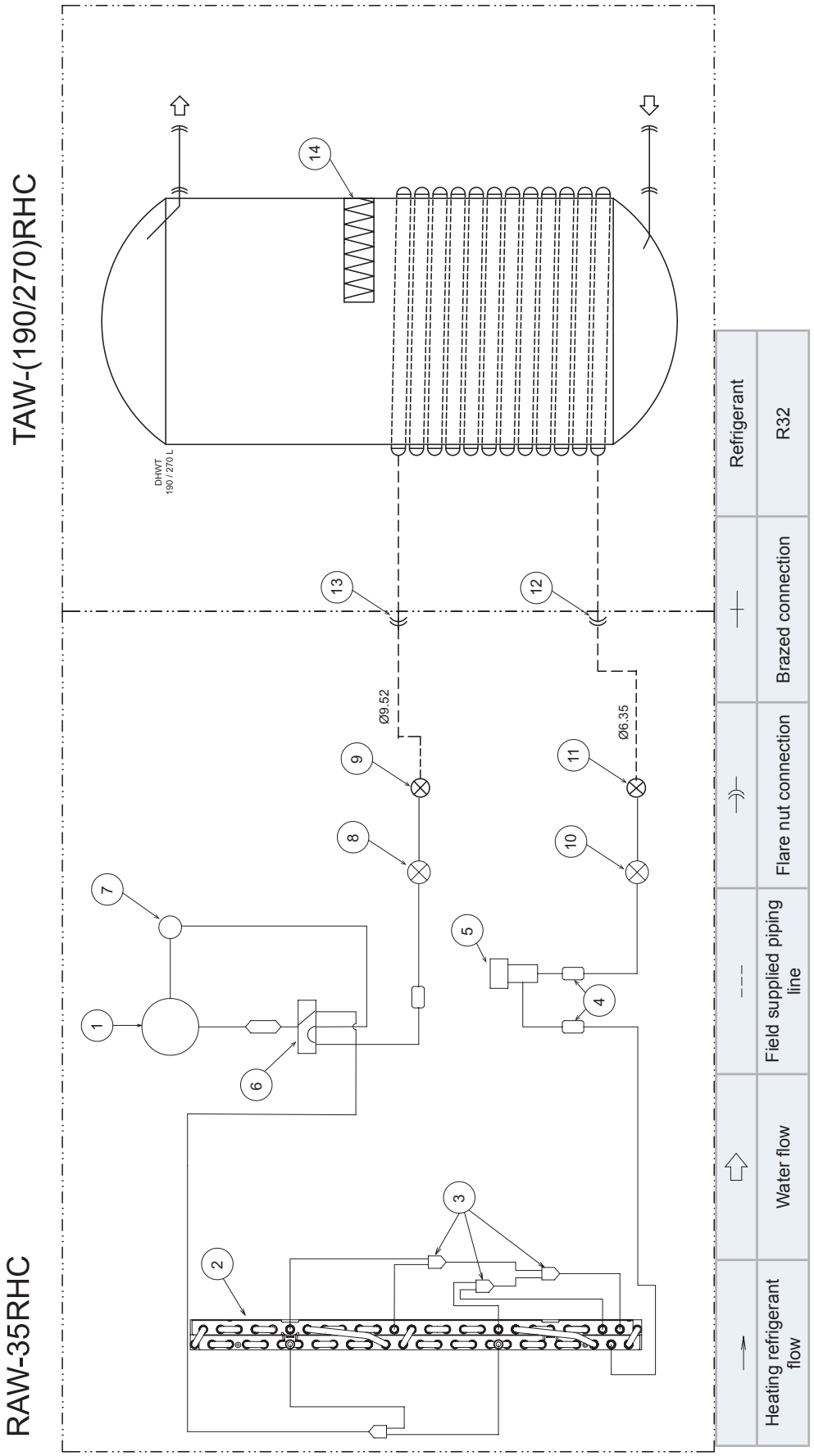

Nº	Part name
1	Compressor
2	Evaporator
3	Distributor
4	Silencer
5	Expansion valve
6	4-way valve
7	Accumulator

Nº	Part name
8	Service Valve (3/8")
9	Single-ended union (3/8")
10	Service Valve (1/4")
11	Single-ended union (1/4")
12	Single-ended union (1/4")
13	Single-ended union (3/8")
14	Electric heater 1.64 kW

9. Refrigerant and water piping

Index

9.1 General notes before performing piping work 38
9.1.1 Piping work 38
9.1.2 Suspension of refrigerant and water pipes 38
9.2 Refrigerant circuit 39
9.2.1 General notes R32 refrigerant 39
9.2.2 Refrigerant piping 39
9.2.3 Refrigerant charge 40
9.3 Domestic Hot Water Circuit 41
9.3.1 Additional hydraulic optional elements 41
9.3.2 Water piping 41
9.3.3 Water quality 42

9.1 General notes before performing piping work

9.1.1 Piping work

- Prepare locally-supplied copper pipes.
- Select the piping size with the correct thickness and correct material able to withstand sufficient pressure.
- Select clean copper pipes. Make sure that there is no dust or moisture inside the pipes. Blow the inside of the pipes with oxygen free nitrogen to remove any dust and foreign materials before connecting them.

NOTE

A system with no moisture or oil contamination will give maximum performance and lifecycle compared to that of a poorly prepared system. Take particular care to ensure that all copper piping is clean and dry internally.

- Cap the end of the pipe when pipe is to be inserted through a wall hole.
- Do not put pipes on the ground directly without a cap or vinyl tape at the end of the pipe.

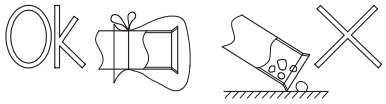

- If piping installation is not completed until next day or over a longer period of time, braze off the ends of the piping and charge with oxygen free nitrogen through a Schrader valve type access fitting to prevent moisture and particle contamination.
- It is advisable to insulate the water pipes, joints and connections in order to avoid heat loss and dew condensation on the surface of the pipes or accidental injures due to excessive heat on piping surfaces.
- Do not use insulation material that contains NH3, as it can damage copper pipe material and become a source of future leakage.
- It is recommended to use flexible joints for the water piping inlet and outlet in order to avoid vibration transmission.
- Refrigerant circuit and Water circuit must be performed and inspected by a licensed technician and must comply with all relevant European and national regulations.
- Proper water pipe inspection should be performed after piping work to assure there is no water leakage in the space heating or DHW circuits.

9.1.2 Suspension of refrigerant and water pipes

- Suspend the refrigerant and water piping at certain points and prevent the refrigerant and water piping from being in direct contact with the building: walls, ceilings, etc.. If there is direct contact between pipes, abnormal sound may occur due to the vibration of the piping. Pay special attention in cases of short piping lengths.

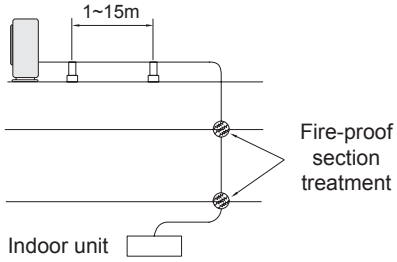

- Do not fix the refrigerant and water pipes directly with the metal fittings (refrigerant piping may expand and contract). Some examples for suspension method are shown below.

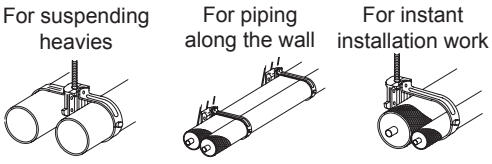

9.2 Refrigerant circuit

9.2.1 General notes R32 refrigerant

This appliance is filled with R32, an odourless flammable refrigerant gas with low burning velocity (A2L class pursuant to ISO 817). If the refrigerant is leaked, there is a possibility of ignition if it enters in contact with an external ignition source.

Make sure that unit installation and refrigerant piping installation comply with applicable legislation in each country. Also, in Europe, EN378 must be complied, as it is the applicable standard.

9.2.2 Refrigerant piping

◆ Refrigerant piping length between indoor unit and outdoor unit

The refrigerant piping length between indoor unit and outdoor unit should be designed using the following chart.

Keep the design point within the area of the chart, which is showing the applicable height difference according to piping length.

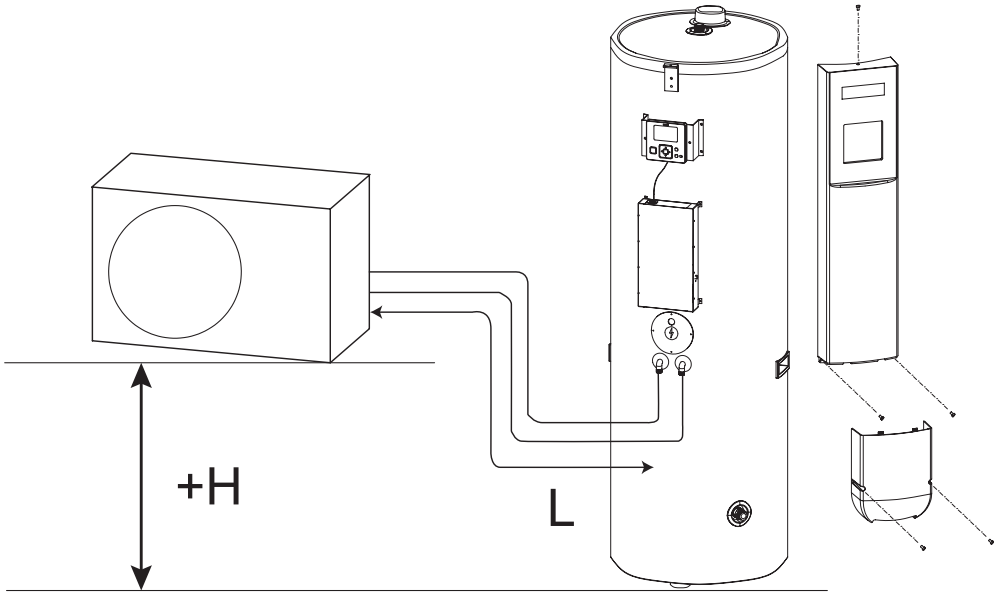

Maximum piping length between outdoor unit and indoor unit (Lmax)	20 m
Minimum piping length between outdoor unit and indoor unit (Lmin)	5 m
Maximum height difference between indoor and outdoor unit (H)	Outdoor unit higher than indoor unit: 10 m
	Indoor unit higher than outdoor unit: 10 m

◆ Refrigerant piping size

Piping connection size of outdoor unit and indoor unit

Outdoor unit			Indoor unit		
Model	Pipe size		Model	Pipe size	
	Gas pipe	Liquid pipe		Gas pipe	Liquid pipe
RAW-35RHC	Ø9.52 (3/8")	Ø 6.35 (1/4")	TAW-(190/270)RHC	Ø9.52 (3/8")	Ø 6.35 (1/4")

The unit installation and refrigerant piping should comply with the relevant local and national regulations for the designed refrigerant.

Due to R32 refrigerant and depending on final refrigerant charge amount, a minimum floor area for installation must be considered. If total refrigerant charge amount <1.84kg, there are no additional minimum floor area requirements.

◆ Minimum area requirements

In case of total refrigerant amount ≥1.84 kg, the unit should be installed, operated and stored in a room with a floor area larger than the minimum criteria. Use following graphic and table to determine these minimum criteria:

Refrigerant Amount (kg)	Minimum Area (m^2) (H:2.2m)
1.84	28.81
1.9	30.72
2.0	34.09
2.1	37.50
2.2	41.36
2.3	45.00
2.4	49.09
2.5	53.18
2.6	57.73
2.7	61.82
2.8	66.82
2.9	71.36

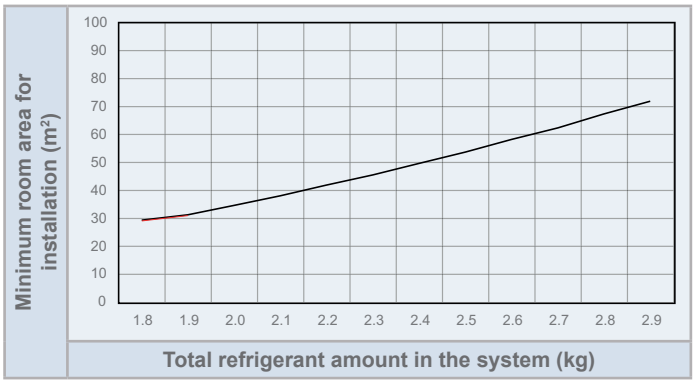

NOTE

In case of not achieving the minimum floor area, contact with your dealer.

9.2.3 Refrigerant charge

◆ Refrigerant charge amount

The R32 refrigerant is factory charged in the outdoor unit with a refrigerant charge amount for 20 m of piping length between outdoor and indoor unit, which is the maximum piping lenght authorized for this product.

◆ Refrigerant charge before shipment (W_0 (kg))

Outdoor unit model	W_0 (kg)
RAW-35RHC	1

9.3 Domestic Hot Water Circuit

DANGER

Do not connect the power supply to the indoor unit prior to filling the DHW circuits with water and checking water pressure and the total absence of any water leakage.

9.3.1 Additional hydraulic optional elements

In case of a recirculation circuit for the DHW circuit:

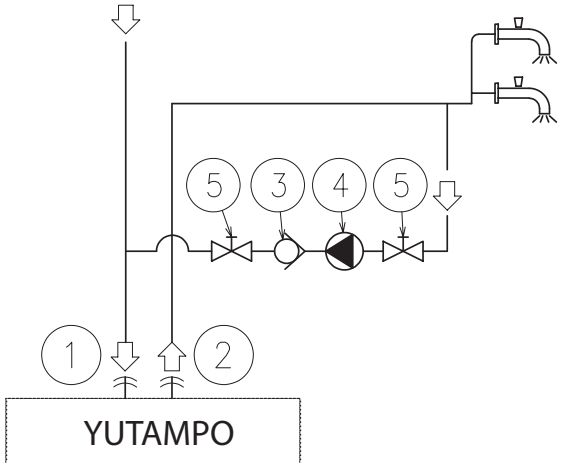

Type	Nº	Part name
Piping connections	①	Water inlet
	②	Water outlet (DHW)
Field supplied	③	Water check valve
	④	Water pump
	⑤	Shut-off valve

- 1 Recirculation water pump (field supplied): this water pump ④ will help to correctly recirculate the hot water to the DHW inlet.
- 1 Water check valve (field supplied) ③ is connected after the recirculation water pump ④ in order to ensure the non-return of water.
- 2 Shut-off valves (field supplied) ⑤: one before the recirculation water pump ④ and other after the water check valve accessory ③.

9.3.2 Water piping

◆ **Water piping size**

(inches)

Model	DHW pipes connection	
	Inlet connection	Outlet connection
TAW-190/270RHC	G 3/4" (male)	G 3/4" (male)

9.3.3 Water quality

⚠ CAUTION

- *Water quality must be according to EU council directive 98/83 EC.*
- *Water should be subjected to filtration or to a softening treatment with chemicals before application as treated water.*
- *It is also necessary to analyse the quality of water by checking pH, electrical conductivity, ammonia ion content, sulphur content, and others. Should the results of the analysis be not good, the use of industrial water would be recommended.*
- *No antifreeze agent shall be added to the water circuit.*
- *To avoid deposits of scale on the heat exchangers surface it is mandatory to ensure a high water quality with low levels of $CaCO_3$.*

◆ Recommendations for the DHW circuit

The following is the recommended standard water quality.

Item	DHW space	Tendency (1)	
	Water supplied (3)	Corrosion	Deposits of scales
Electrical Conductivity (mS/m) (25°C) {µS/cm} (25 °C) (2)	100~2000	●	●
Chlorine Ion (mg Cl^-/l)	max. 250	●	
Sulphate (mg/l)	max. 250	●	
Combination of chloride and sulphate (mg/l)	max. 300	●	●
Total Hardness (mg $CaCO_3$ /l)	60~150		●

NOTE

- *(1): The mark "●" in the table means the factor concerned with the tendency of corrosion or deposits of scales.*
- *(2): The value shown in "{}" are for reference only according to the former unit.*
- *(3): Water range will be according s/UNE 112076:2004 IN.*

10. Electrical and control settings

Index

10.1 System wiring diagram 44

10.2 Electrical wiring diagram 45

10.2.1 TAW-(190/270)RHC 45

10.2.2 RAW-35RHC 46

10.1 System wiring diagram

The units shall be connected according to the following electric diagrams, depending on the applicable powering scheme and according to the local regulations:

In case of power supply through the tank:

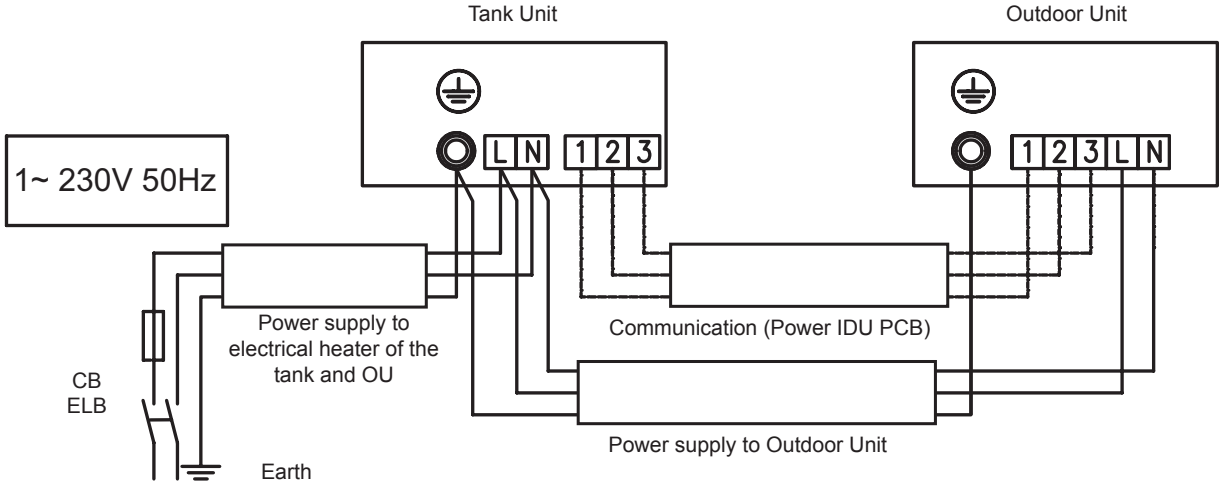

In the case of independent supply to the tank and to the outdoor unit:

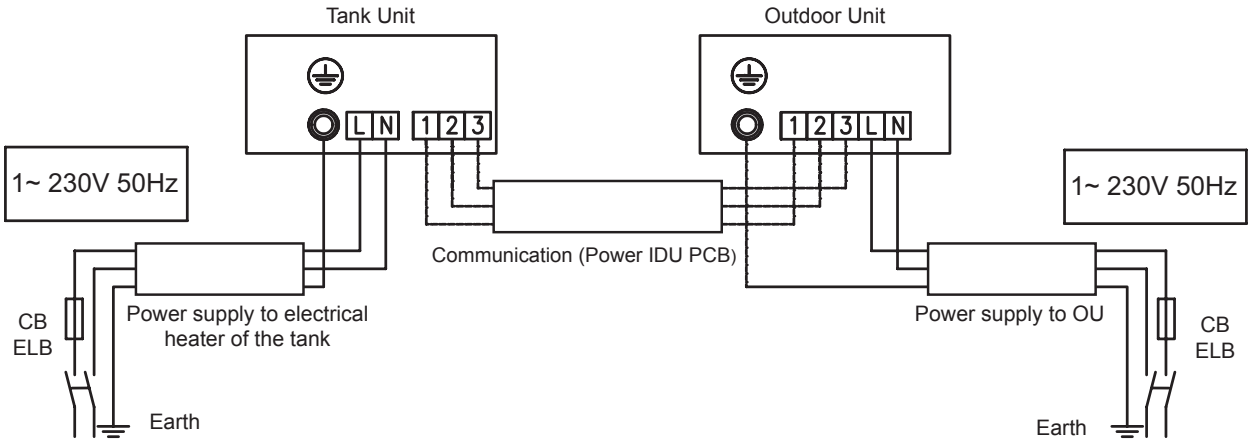

In case of power supply through the tank:

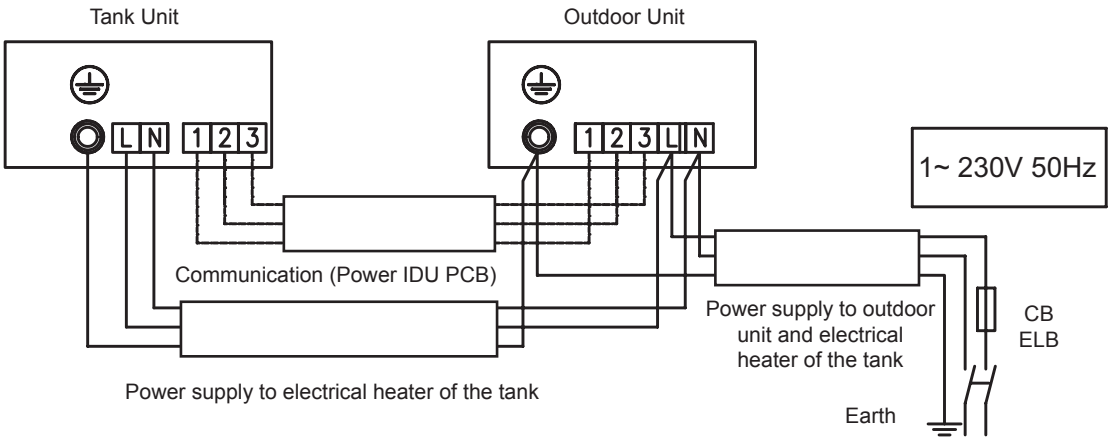

⚠ CAUTION

- *In case of not using electrical heater, indoor unit side must be earth wired by outdoor unit side (1-2-3 and Earth).*
- *Ensure that the transmission wiring is not connected to any live part by mistake, since it could be damage the PCB.*
- *These wiring diagrams are for illustrative purposes only and the positions of the terminals differ from the actual position of the terminals in the electrical box.*

10.2 Electrical wiring diagram

10.2.1 TAW-(190/270)RHC

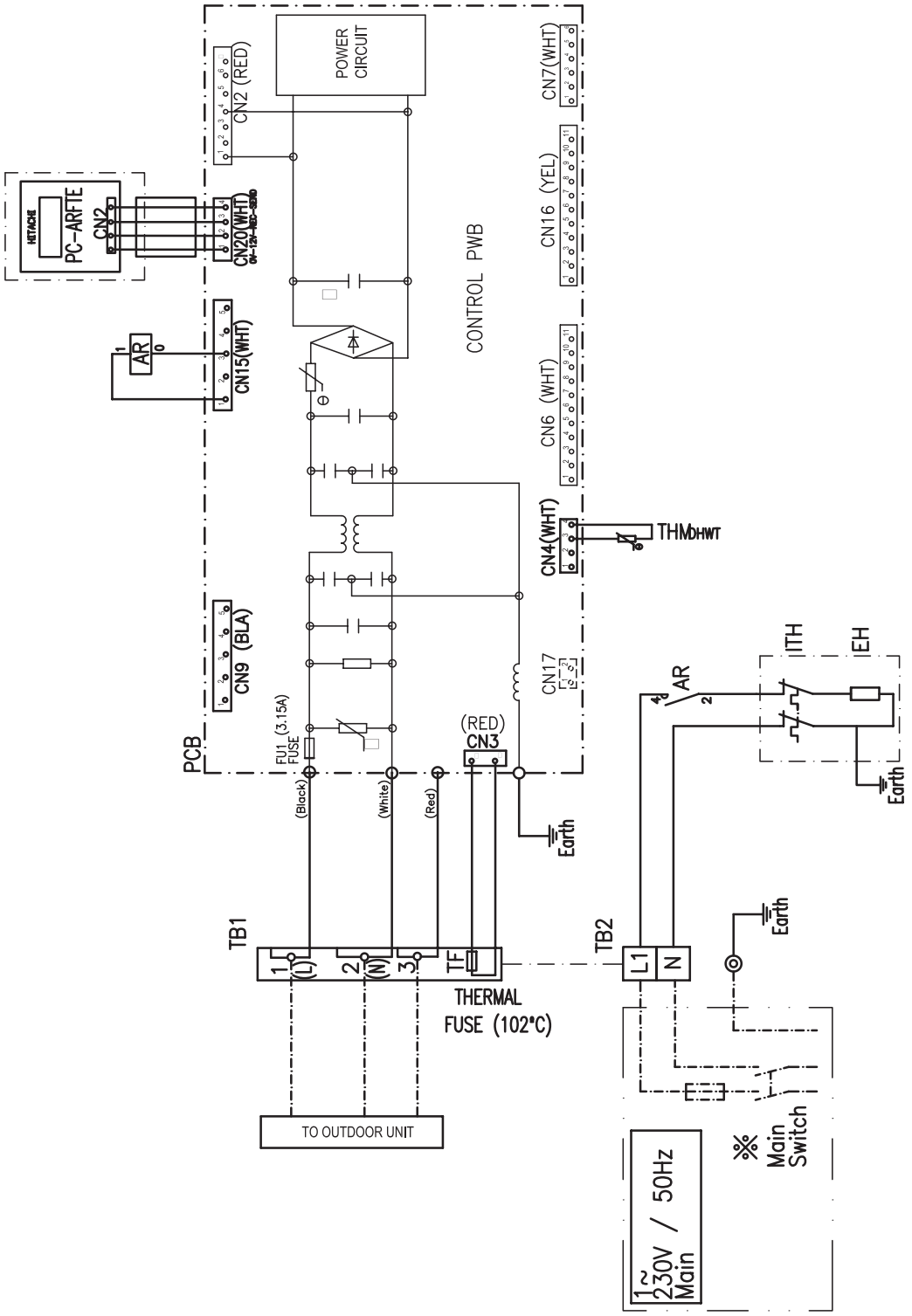

10.2.2 RAW-35RHC

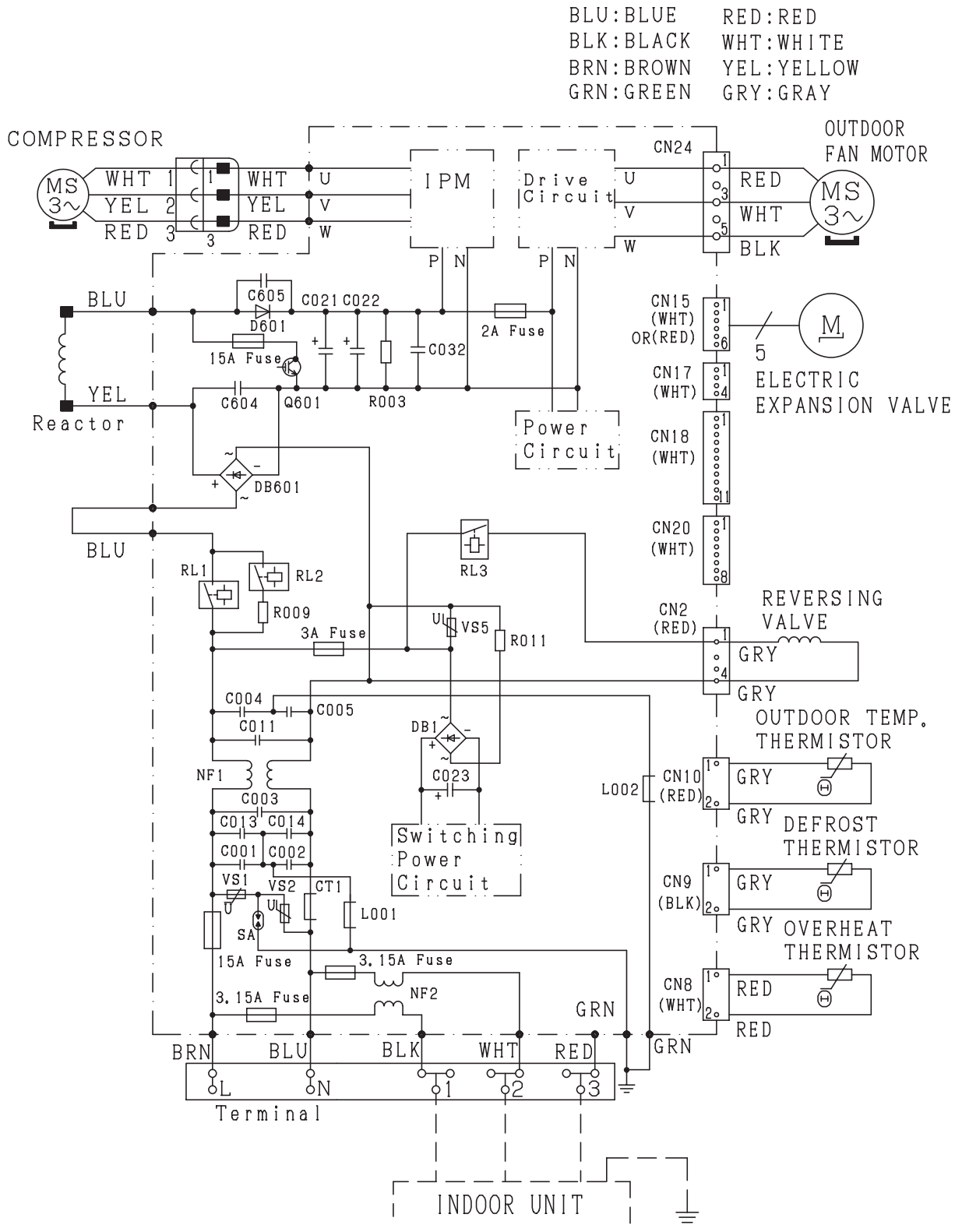

11. Optional functions

Index

11.1 Optional functions from unit controller 48

11.2 Optional external input/output signals 49

11.2.1 Available ports 49

11.2.2 Connections 50

11.2.3 Specification of the components for a correct installation 50

11.2.4 Input functions (To be configured from the unit controller) 51

11.2.5 Output functions (To be configured from the unit controller) 51

11.1 Optional functions from unit controller

Optional function	Explanation
DHW anti-Legionella protection	A specific setting is available to protect the DHW system against Legionella, which raises up the DHW temperature over the normal DHW tank temperature setting (using the electric heater of the DHW tank and/or the heat pump) on a periodic basis.
Smart action	This function allows an external tariff switch device to switch OFF the heat pump and/or the DHW during peak electricity demand period. Depending on the setting, the heat pump and/or DHW become blocked or only is switched ON the DHW when signal is open/closed.
DHW re-circulation	This function allows the activation of the water pump for the re-circulation of the hot water from the DHW tank by means of the heat pump. This function can also be used with the anti-legionella protection function.
DHW boost	With this function enabled, it is possible to request a heating up of the DHW when user requires an instantaneous delivery of DHW.
Power meter data control	The measuring of the real power consumption can be done connecting an external power meter. The number of pulses of the power meter is a variable which must be set through the unit controller.
Emergency operation	Emergency operation by means of the electrical heater in case of outdoor unit malfunction.
Night Shift	This function allows to set a lower power with the intention of decrease the noise during the night time.

11.2 Optional external input/output signals

The system has 3 input and 4 output optional signals. The new YUTAMPO series allow different ports to be configured for those I/O signals, as well. Optional part (ATW-OFC-02) can be used for better installation

The user can configure those input signal to perform different functions from the unit controller. This is briefly explained in the next tables:

11.2.1 Available ports

Code	Name	Port		Input type
i1	Input 1	CN6#1-6	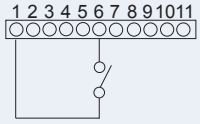	5Vdc
i2	Input 2	CN6#1-7	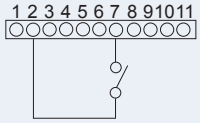	5Vdc
i3	Input 3	CN21#2-3	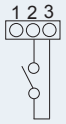	5Vdc
o1	Output 1	CN9#1-2	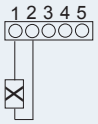	12Vdc
o2	Output 2	CN9#1-3	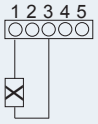	12Vdc
o3	Output 3	CN9#1-4	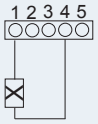	12Vdc
o4	Output 4	CN9#1-5	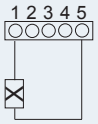	12Vdc

11.2.2 Connections

The system has the following connections:

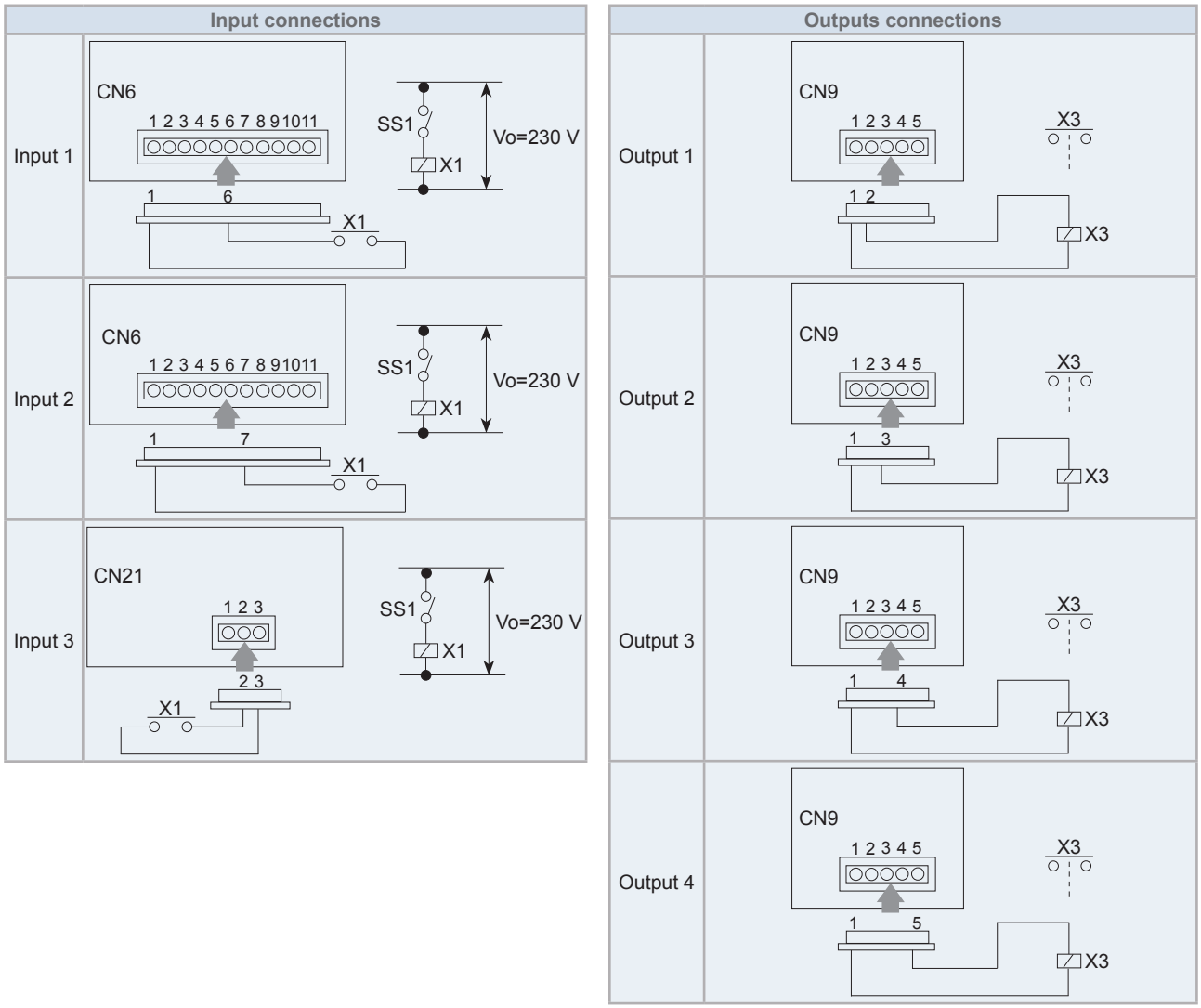

11.2.3 Specification of the components for a correct installation

Component		Manufacturer or specifications	Remarks
Auxiliary relay (X1)		OMRON mini power relay model: MY1F or equivalent	Voltage between relay terminals 12 Vdc - 75 mA
Auxiliary relay (X3)		OMRON mini power relay model: LY2F or equivalent	Voltage between relay terminals 12 Vdc
(SS1) (X1), (x2) contact example		Manual type	Voltage between terminals of the 230V - 5mA contactor
3P connector cable		Optional part PCC-1A (capable of connecting the JST XHP - 3 connector)	Five wires with connectors as one set
Wire (control)	Voltage: 12V DC	0.3 mm^2	
Wire (power)	Voltage: 230 V	2.0 mm^2	

NOTE

- *The connection of the input signal is only an example.*
- *Keep the CN6, CN16 and CN9 wires as short as possible.*
- *Do not run transmission wiring along 230V / 400V CA power supply cables. Leave a distance of more than 30 cm between them. (Intersection are occasionally allowed).*
- *If you install the wires along a power supply wire, insert the wires in a metal conduit tube and ground one end of the tube.*
- *The maximum wiring length is 5 m. If you use this function, it is recommended that you use safety devices such as an electrical leakage breaker or a smoke detector.*
- *Use optional part ATW-OFC-02 for better installation.*

11.2.4 Input functions (To be configured from the unit controller)

Function	Input	Description
1	Smart Act./ SG1	This function must be used to block or limit the heat pump when restricted by Electric company. It allows an external Smart switch device to switch off or reduce consumption of the heat pump during time of peak electricity demand.
2	DHW boost	With this function enabled, it is possible to request a heating up of the DHW when user requires an instantaneous delivery of DHW.
3	Power meter 1	Input used as kW/h pulse count for Energy data recording
4	Force OFF	Force OFF operation for unit. RCS will continue as normally set but will show indication that operation is forbidden
5	SG2	In case of want to use Smart Grid Ready application, this input is used as a digital input 2 and allow four different operating modes

11.2.5 Output functions (To be configured from the unit controller)

Function	Output	Description
1	Alarm signal	Output when an “Alarm Code” is received from Indoor Unit or outdoor unit.
2	Operation signal	Output in case that "Thermo ON" signal in any condition
3	Defrost	Output if the operation state (STUNT) of the outdoor unit is defrosting.
4	DHW re-circulation pump	In case of re-circulation pump enabled for DHW tank

HITACHI

Johnson Controls-Hitachi Air Conditioning Spain, S.A.U.
Ronda Shimizu, 1 - Políg. Ind. Can Torrella
08233 Vacarisses (Barcelona) Spain

Hitachi certifies that our products have met EU consumer safety, health and environmental requirements.

AENOR GESTIÓN DE LA CALIDAD ISO 9001 ER-0198/1996

AENOR GESTIÓN AMBIENTAL ISO 14001 GA-1999/0044

Johnson Controls-Hitachi Air Conditioning Spain, S.A.U. is certified with: ISO 9001 of AENOR, Spain for its Quality Management accordance with the standard ISO 14001 of AENOR Spain for its Environmental Management systems accordance with the standard.

Hitachi meets the requirements of the KEYMARK Certification Scheme. See Heat Pump KEYMARK database for detailed information.

TCGB0135 rev.0 - 06/2020

Printed in Spain